EVlink™ Electric Vehicle Charging Solutions

Powering the Future of Sustainable Mobility

Catalog
2800CT1001

2014

Class 2800

CONTENTS

Description . . . . . Page 2
Outdoor Cloud Connected . . . . . Page 3
Service Plans . . . . . Page 6
Outdoor Charging Stations—Basic . . . . . Page 7
Wall-Mount . . . . . Page 7
Outdoor Basic Pedestal-Mount . . . . . Page 8
Residential Charging Stations . . . . . Page 11
Required Accessories for Outdoor Basic RFID* Enabled Units Page 14

Schneider Electric™

Description

Smart Charging, Smart Savings, Smart Grid

EVlink Electric Vehicle (EV) charging stations by Schneider Electric offer convenient ways for EV drivers to get charged at home, at work, and in all other Public & Private locations.

EVlink is durable and "smart" with features that provide an enhanced charging experience for both the station owners and drivers. Our EVlink EV chargers meet Society of Automotive Engineers standards (SAE J1772) and have been tested for auto and grid interoperability by major Auto Original Equipment Manufacturers and utilities.

Our team of EVlink experts are dedicated to saving you time and resources with EV readiness planning, local and nationwide site auditing and project management, enabling an EV charging infrastructure that is sustainable, reliable and scalable.

To discover the power of charging, call us at 1- 888-778-2733. Select Option 1 "Technical Support", then Option 1 again "Distribution" products, and then Option 6 "Other".

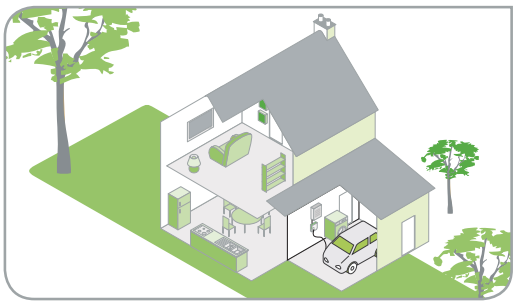

Home EV Charging

EVlink Residential Charging Stations provide a convenient way to charge at home. Rated for indoor safety, the intuitive design features a delay timer that you can set-and-go to save money, time and energy (kWh). Each station comes complete with a separate docking bracket for additional flexibility in installation and usage, and a customized skin that allows you to personalize your charger with your own unique style.

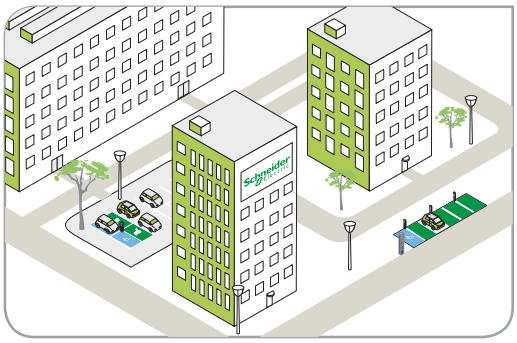

Commercial EV Charging

EVlink Basic charging stations offer an easy way to charge away from home. Rated for outdoor durability, its minimalistic design features access control with or without RFID card usage. EVlink Commercial stations are offered as Wall or Pedestal mount, making them adaptable for all environments. Pedestal models are available with single or dual connectors (J1772 plug) for additional accessibility and simultaneous EV charging.

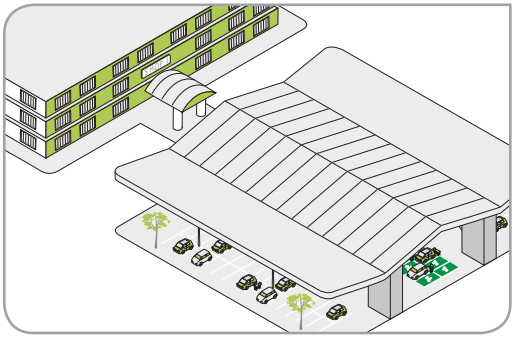

EVlink Cloud Connected charging stations empower you with the visibility, control and data insights you need to effectively implement and manage your EV charging infrastructure. Through its connection to the ChargePoint network, this station offers simplified billing and payment processing, remote monitoring and diagnostics, rate scheduling, and utilization analysis. Driver benefits include station locator mobile app, large LCD screen displaying step-by-step charging instructions, and hotline support available 24/7.

Tiered Service Packages offer ongoing preventative maintenance, extended warranty, and critical turnaround services and expedited parts replacement.

© 2011–2014 Schneider Electric
All Rights Reserved

Outdoor Cloud Connected

Features

Network Connectivity (gateway unit, two antennae):

- Wireless communication to server via cellular network
- IEEE 802.15.4 wireless communication with non-gateway units
- Station location and occupancy status via network
- Remote monitoring of status and power usage
- Enables remote maintenance services

NOTE: At least one gateway unit is required for each cluster of Cloud Connected charging stations within a 150 ft. line of sight. A gateway unit establishes a cellular connection for each non-gateway (Cloud Connected) unit on a cluster. A gateway unit is required for a single-unit installation.

Interface:

- Backlit color LCD screen displays charging instructions, charging status, and usage fees
- Red indicator lights on front panel for system detected faults

Authentication:

- ChargePoint® card or Contactless credit card
- Track customer usage history
- Optional payment by time/energy usage

Enclosure and Mounting:

- Metallic enclosure
- Metallic mounting pedestal

NOTE: Use on vehicles with an SAE J1772 compliant connector with silver plated contacts only. Go to www.schneiderelectric.us/sites/us/en/support/ documents-downloads.page or call 1-888-778-2733 for a list of compatible vehicles.

NOTE: Service plan required. See Page 6 for details.

Commercial Applications

Network Connectivity (non-gateway units, single antenna):

- IEEE 802.15.4 wireless communication with gateway unit
- 150 ft (45 m) near line of sight communication range

Holders for Connector and Cable:

- Support and help organize cables
- Connector storage dock
- Integral with the enclosure

Connector and Cable:

- Complies with SAE J1772
- Cable length: 18 ft. (5.5 meter)

Protection:

- Integral Ground Fault Protection at 20 mA
- Ground fault function tested before each charge cycle begins
- Auto restart after ground fault or main power loss

NOTE: Dual gateway charging unit shown— see Table 1 for single charging unit and non-gateway options.

Catalog Numbers

Table 1: Outdoor Cloud Connected Charging Stations[1]

Catalog Number	Unit Type	Input Voltage System	Output Current	Mounting Type	Charging Units	Country
EV230PSRACG	Gateway	208–240 Vac	30 A[2]	Pedestal	Single	US only
EV230PSRACNG	Non-Gateway			Pedestal		US and Canada
EV230PDRACG	Gateway			Pedestal	Dual	US only
EV230PDRACNG	Non-Gateway			Pedestal		US and Canada
EV230PSRACGC	Gateway			Pedestal	Single	Canada only
EV230PDRACGC				Pedestal	Dual	Canada only
EV230WDRACG				Wall		US only
EV230WDRACNG	Non-Gateway			Wall		US and Canada
EV230WDRACGC	Gateway			Wall		Canada only

1 Service plan required. See Page 6 for details.

2 Feeder circuit breaker size = 40 A.

© 2011–2014 Schneider Electric
All Rights Reserved

Technical Specifications

Single Cloud Connected Unit

Dual Cloud Connected Unit

Outdoor Cloud Connected Pedestal-Mount Units

Outdoor Cloud Connected Wall Mounted Unit

Table 2: Outdoor Cloud Connected Pedestal-Mount Charging Stations

Power Specifications (Each charging unit)		
Input Power	208–240 Vac, 30 A, single phase, 60 Hz	
Input Power Connection	Line 1, Line 2, and Ground	
Feeder Circuit Breaker	2-pole, 40 A, non-GFCI type	
Output Power	208–240 Vac, 30 A	
Physical Specifications		
Enclosure Type	Type 3R	
Enclosure Dimensions	See dimensions on Page 5	
Enclosure Mounting	Pedestal	
Cable Type	SAE J1772	
Cable Length	18 ft. (5.5 m)	
Cable Management	Non-retractable, integral with the enclosure	
Unit Options / Shipping Weights	Single networked unit (gateway) Single networked unit (non-gateway)	101 lbs. (45.8 kg)
	Dual networked unit (gateway) Dual networked unit (non-gateway)	115 lbs. (52 kg)
User Interface		
Charging Instructions and Status	Backlit LCD color display	
Error Messages	Backlit LCD color display	
System Detected Fault	Red indicator light(s) on front panel	
Authentication		
Option 1	ChargePoint card	
Option 2	Contactless Credit card	
Programming	ChargePoint cellular network system	
Protection		
Ground Fault Protection	Integral, CCID 20 mA, auto reset	
Ground Fault Protection System Test	Automatic test at the beginning of each charge cycle	
Environmental		
Operating Temperature	-22°F to 104°F (-30°C to 40°C)	
Electro-static Discharge	15 kV open air, 8 kV contact	
Surge	6 kV	
Radiated Immunity	20 V/m	
Conducted Immunity	20 V	
Electrical Fast Transient/Burst (EFTB)	2 kV	
Emissions	FCC Class A	
Standards Compliance		
NEC Article 625		
SAE J1772		
UL 2594		
CSA 22.2		

© 2011–2014 Schneider Electric
All Rights Reserved

Dimensions—Outdoor Cloud Connected Pedestal-Mount Charging Stations

Figure 1: Cloud Connected Pedestal-Mount Charging Stations

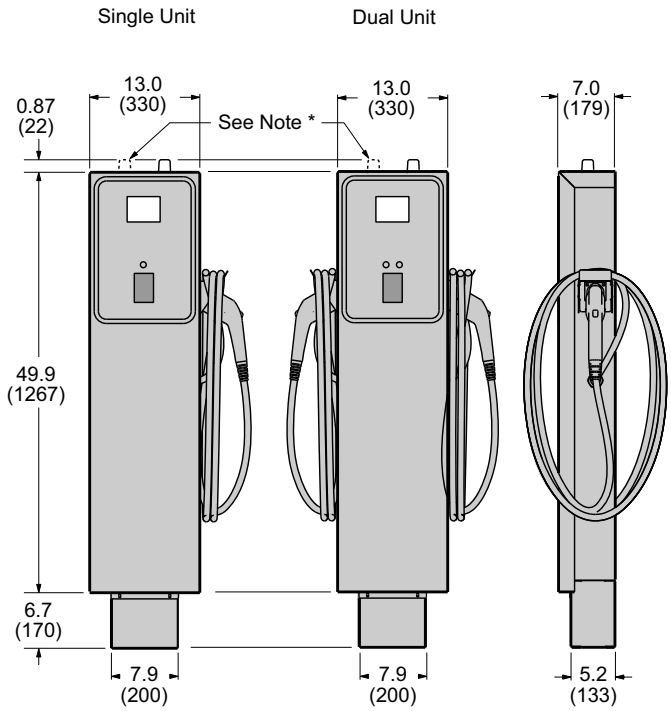

Figure 2: Pedestal Base for Outdoor Charging Stations

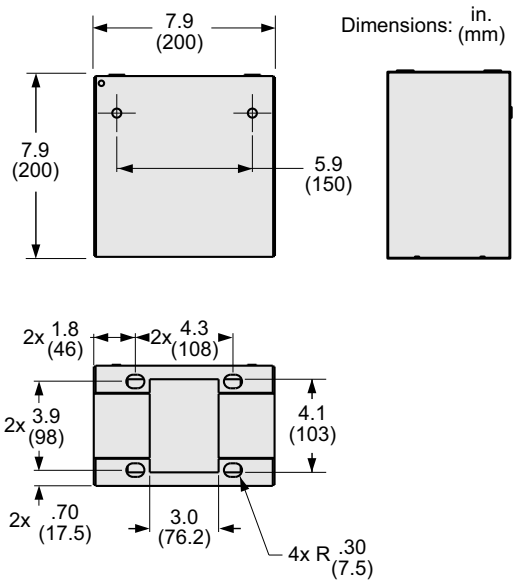

© 2011–2014 Schneider Electric
All Rights Reserved

Service Plans

Service plans provide Cloud Connected (Networked) station owners the ability to remotely manage their EV charging stations with features including flexible management tools, in-depth data analysis, payment processing, and 24/7 driver support.

Service plans are required with every purchase of a Cloud Connected EVlink unit.

One service plan per cord set is needed. For example, a dual pedestal unit— which has two cord sets—would require two service plans.

Types of Plans

There are six types of Commercial Service Plans offered:

- Use EV charging to attract new customers to your business, generate a new source of revenue and give your clientele another reason to frequent your parking lot.

Catalog Number	Type	Service Length	Features
EVNETCOMM1	Commercial	1 year	• Set pricing flexibility • Provide multiple payment options • Collect payment automatically • Offer reservations • Advertise • Report revenue
EVENETCOM2		2 year	
EVNETCOMM3		3 year	
EVNETSP1	Service Provider	1 Year	**All capabilities of Commercial, plus:** • Create driver-branded website • Manage energy load • Analyze driver use patterns
EVNETSP2		2 Year	
EVNETSP3		3 Year	

Accessories

Catalog Number	Description
EVNETKF50	ChargePoint[1] cards

[1] Required with purchase of Cloud Connected units.

© 2011–2014 Schneider Electric
All Rights Reserved

Outdoor Charging Stations—Basic

Wall-Mount

Features

Interface:

- Power status
- Charge indicator
- System detected fault indicator

Authentication:

- Localized RFID solution (optional)

Cable Holder:

- Connector dock
- Supports and helps organize the cable
- Independently mounted from enclosure

Protection:

- Integral Ground Fault Protection at 20 mA
- Ground fault function tested before each charge cycle begins
- Auto restart after ground fault or main power loss

Enclosure:

- Metallic enclosure
- Indoor/outdoor wall-mount

Connector and Cord:

- Complies with SAE J1772
- Cable length: 18 ft. (5.5 meter)

Outdoor Wall-Mount Charging Station

Residential and Commercial Applications

NOTE: Use on vehicles with an SAE J1772 compliant connector with silver plated contacts only. Go to www.schneiderelectric. us/sites/us/en/support/documents-downloads.page or call 1-888-778-2733 for a list of compatible vehicles.

Catalog Numbers

Table 3: Outdoor Charging Stations—Wall-Mount

Catalog Number	Input Voltage System	Output Current	Mounting Type	Charging Units	Application	Features
EV230WSR	208–240 Vac	30 A[1]	Wall	Single	Indoor/Outdoor	—
EV230WSRR	208–240 Vac	30 A[1]	Wall	Single	Indoor/Outdoor	RFID (basic)

[1] Feeder circuit breaker size = 40 A.

© 2011–2014 Schneider Electric
All Rights Reserved

Outdoor Basic Pedestal-Mount

Features

Interface:

- Power status
- Charge indicator
- System detected fault indicator

Authentication:

Localized RFID solution (optional)

Connector and Cable:

- Complies with SAE J1772
- Cable length: 18 ft. (5.5 meter)

Enclosure and Mounting:

- Metallic enclosure
- Metallic mounting pedestal

Holders for Connector and Cable:

- Support and help organize cables
- Connector storage dock
- Integral with the enclosure

Protection:

- Integral Ground Fault Protection at 20 mA
- Ground fault function tested before each charge cycle begins
- Auto restart after ground fault or main power loss

NOTE: Dual charging unit shown— see Table 4 for single charging unit options

Commercial Applications

NOTE: Use on vehicles with an SAE J1772 compliant connector with silver plated contacts only. Go to www.schneiderelectric.us/sites/us/en/support/ documents-downloads.page or call 1-888-778-2733 for a list of compatible vehicles.

Catalog Numbers

Table 4: Outdoor Charging Stations—Pedestal-Mount

Catalog Number	Input Voltage System	Output Current	Mounting Type	Charging Units	Application	Authentication
EV230PSR	208–240 Vac	30 A[1]	Pedestal	Single	Outdoor	—
EV230PDR				Dual		—
EV230PSRR				Single		RFID (basic)
EV230PDRR				Dual		RFID (basic)

[1] Feeder circuit breaker size = 40 A per charging port.

NOTE: See page 14 for required accessories.

© 2011–2014 Schneider Electric
All Rights Reserved

Technical Specifications

Outdoor Basic Wall-Mount

Single Basic Unit

Dual Basic Unit

Outdoor Basic Pedestal-Mount Units

Table 5: Outdoor Basic Wall-Mount and Pedestal-Mount Charging Stations

Power Specifications (Each charging unit)		
Input Power	208–240 Vac, 30 A, single phase, 60 Hz	
Input Power Connection	Line 1, Line 2, and Ground	
Feeder Circuit Breaker	2-pole, 40 A, non-GFCI type	
Output Power	208–240 Vac, 30 A	
Physical Specifications		
Enclosure Type	Type 3R	
Enclosure Dimensions	See dimensions on Page 10	
Enclosure Mounting	Wall or Pedestal	
Cable Type	SAE J1772	
Cable Length	18 ft. (5.5 m)	
Cable Management	Non-retractable, integral with the enclosure	
Unit Options / Shipping Weights	Single unit (Wall-mount)	38 lbs. (17 kg)
	Single unit (Pedestal-mount)	92 lbs. (42 kg)
	Dual unit (Pedestal-mount)	106 lbs. (48 kg)
User Interface		
Power Available	Status indicator	
Charging	Blinking blue indicator	
System Detected Fault	Red status indicator	
Authentication		
Type	Basic RFID authentication card	
Programming	Radio frequency remote control	
Protection		
Ground Fault Protection	Integral, CCID 20 mA, auto reset	
Ground Fault Protection System Test	Automatic test at the beginning of each charge cycle	
Environmental		
Operating Temperature	-22°F to 131°F (-30°C to 55°C)	
Electro-static Discharge	15 kV open air, 8 kV contact	
Surge	6 kV	
Radiated Immunity	20 V/m	
Conducted Immunity	20 V	
Electrical Fast Transient/Burst (EFTB)	2 kV	
Emissions	FCC Class B	
Standards Compliance		
NEC Article 625		
SAE J1772		
UL 2594		
CSA 22.2		

© 2011–2014 Schneider Electric
All Rights Reserved

Figure 3: Outdoor Wall-Mount Charging Station

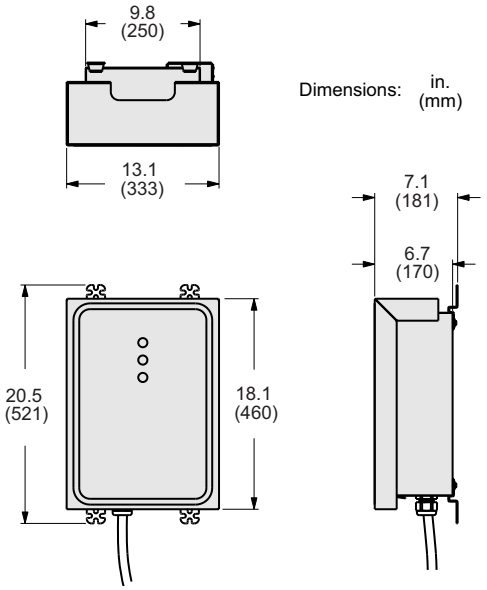

Figure 4: Wall-Mount Cable Bracket with Connector Dock

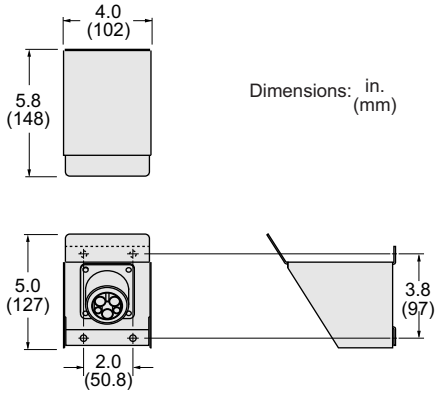

Figure 5: Basic Pedestal-Mount Charging Stations

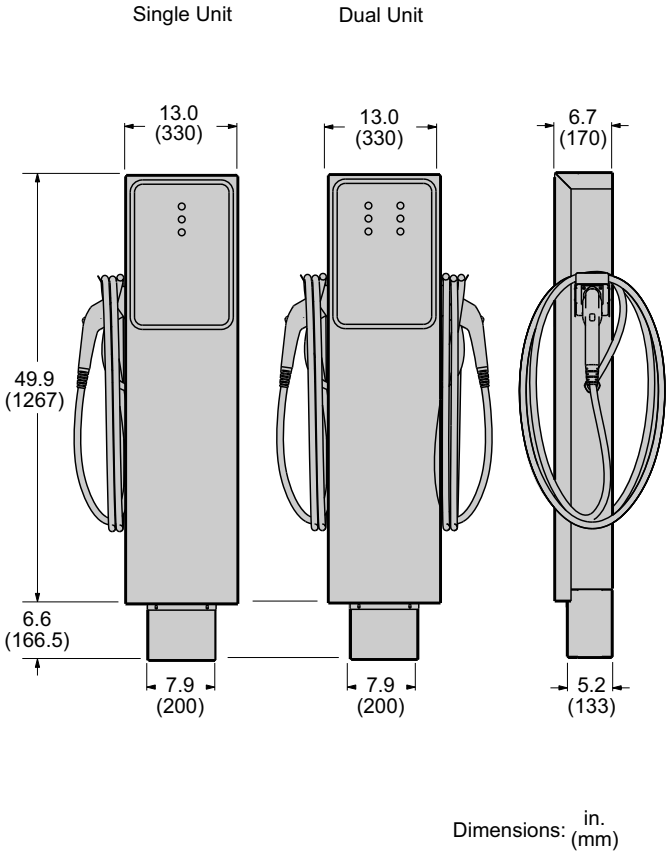

© 2011–2014 Schneider Electric
All Rights Reserved

Residential Charging Stations

Features

Interface:

- Segmented charge and delay charge progress indicator
- Stop Button and Indicator
- Power status and system detected fault indicator
- Delay button and indicator

Enclosure:

- Non-metallic
- Indoor wall-mount (stud, drywall, or masonry wall)
- Personalization available with free skin

Protection:

- Integral Ground Fault Protection:
  — EV230WS 20 mA
- Ground fault function tested before each charge cycle begins
- Auto restart after ground fault or main power loss

Cable Holder:

- Supports and helps organize the cable
- Independently mounted from enclosure

Connector and Cord:

- Complies with SAE J1772
- Cable length: 18 ft. (5.5 meter)

EV230WS

Indoor Charging Stations

Residential Applications

EV230WS
(shown with skin)

NOTE: Use on vehicles with an SAE J1772 compliant connector with silver plated contacts only. Go to www.schneiderelectric.us/sites/us/en/support/documents-downloads.page or call 1-888-778-2733 for a list of compatible vehicles.

Catalog Numbers

Table 6: Indoor Charging Station—Wall-Mount

Catalog Number	Input Voltage System	Output Current	Mounting Type	Charging Units	Application	Features
EV230WS	208–240 Vac	30 A[1]	Wall	Single	Indoor	Delay Start

[1] Feeder circuit breaker size = 40 A.

© 2011–2014 Schneider Electric
All Rights Reserved

Technical Specifications

Figure 6: Indoor Charging Station Wiring Diagrams

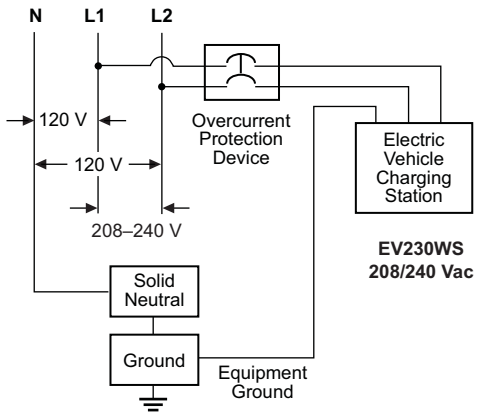

Table 7: Indoor Charging Stations

Power Specifications	
Input Power	208–240 Vac, single-phase, 60 Hz, 30 A maximum
Input Power Connection	Line 1, Line 2, and Ground
Feeder Circuit Breaker	2-pole, 40 A, non-GFCI type
Output Power	208–240 Vac, 30 A, 7.2 kW max.

Physical Specifications	
Enclosure Type	Type 1 (Indoor only)
Enclosure Dimensions	See dimensions on Page 13
Enclosure Mounting	Wall-mount
Cable Type	SAE J1772
Cable Length	18 ft. (5.5 m)
Cable Management	Non-retractable, separate from the enclosure
Shipping Weight	17.0 lbs. (7.71 kg)

User Interface	
Power Available	Status indicator
Charging	Eight-segment progress indicator
Ground Fault	Red status indicator
System Detected Fault	Push button and red stop indicator
Delay Start	Push button to delay up to eight hours, in one-hour increments

Protection		
Ground Fault Protection	EV230WS	Integral, CCID 20 mA, auto reset
Ground Fault Protection System Test		Automatic at the beginning of each charge cycle

Environmental	
Operating Temperature	-22°F to 131°F (-30°C to 55°C)
Electro-static Discharge	15 kV open air, 8 kV contact
Surge	6 kV
Radiated Immunity	20 V/m
Conducted Immunity	20 V
Electrical Fast Transient/Burst (EFTB)	2 kV
Emissions	FCC Class B

Standards Compliance
NEC Article 625
SAE J1772
UL 2594
CSA 22.2

NOTE: Use on vehicles with an SAE J1772 compliant connector with silver plated contacts only. Go to www.schneiderelectric.us/sites/us/en/support/documents-downloads.page or call 1-888-778-2733 for a list of compatible vehicles.Dimensions—Indoor Wall-Mount Charging Stations.

© 2011–2014 Schneider Electric
All Rights Reserved

Figure 7: Indoor Wall-Mount Charging Station

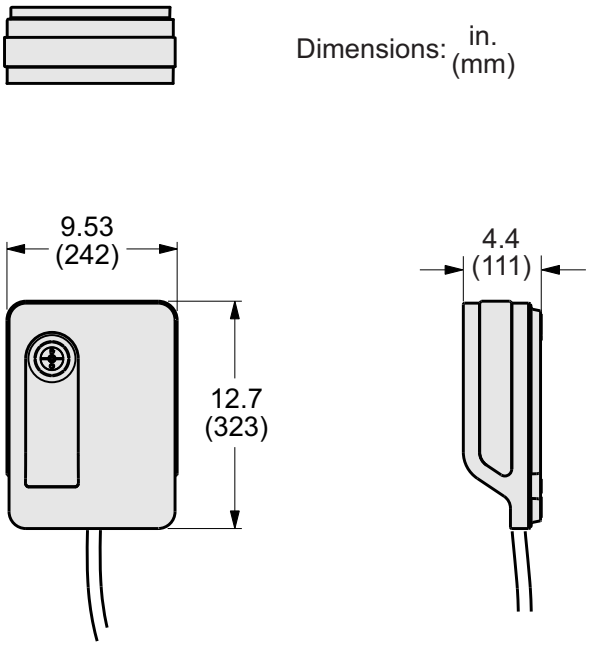

Figure 8: Wall-Mount Cable Bracket with Connector Dock

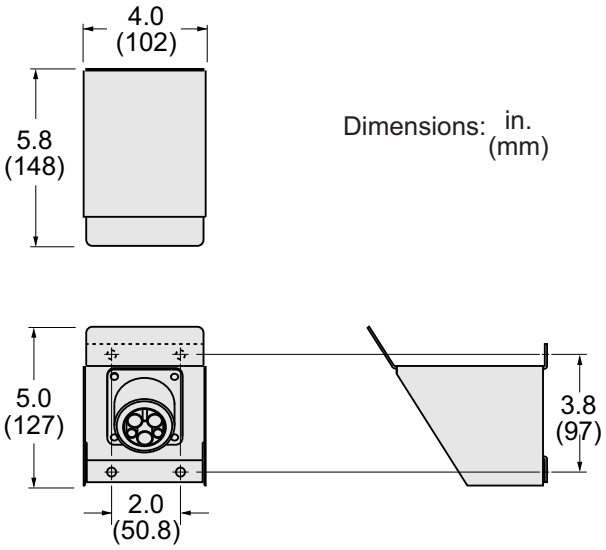

© 2011–2014 Schneider Electric
All Rights Reserved

Required Accessories for Outdoor Basic RFID* Enabled Units

RFID solutions are required for EV230PDRR, EV230PSRR, EV230WSRR Level 2 Schneider Electric EV charging stations consisting of the following accessories:

- Handheld Programmer (EVRFIDHP)
- RFID Authentication Cards (EVRFIDKF, quantities of 10)

Handheld Programmer

EVRFIDHP

Features

- Used to add and remove users
- One needed for total charging station system
- Connects via radio frequency
- Feedback via audio tone and LED indicator on Proximity Reader
- 4-digit PIN access

Technical Specifications	
Frequency	125 kHz / 62.5 kHz
Dimensions	See dimensions on Page 15
Weight	7 oz. (200 g)
Operating Temperature	-22°F to 131°F (-30°C to 55°C)
Color	Black
Material	ABS

Description	Catalog Number
RFID Handheld Programmer	EVRFIDHP

RFID Authentication Cards

EVRFIDKF-10

Features (Level 2 chargers only)

- Wallet friendly
- Robust and durable design
- Unique ID codes

Technical Specifications	
Frequency	125 kHz / 62.5 kHz
Weight	0.31 oz. (8.8 g)
Operating Temperature	-40°F to 158°F (-40°C to +70°C)
Humidity	0–100% non-condensing
Material	ABS

Description	Catalog Number
RFID Authentication Card (Quantity of 10)	EVRFIDKF-10

* RFID = Radio Frequency Identification.

© 2011–2014 Schneider Electric
All Rights Reserved

RFID Accessory Dimensions (basic only)

Figure 9: Handheld Programmer for Level 2 RFID Units

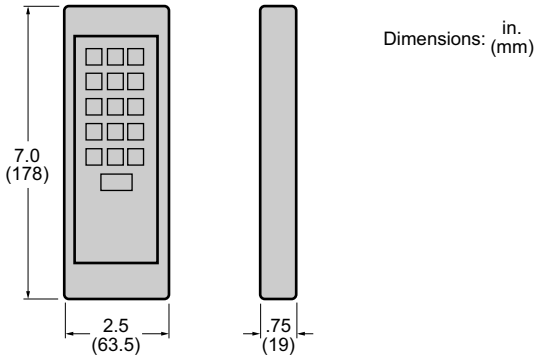

Figure 10: RFID Authentication Cards

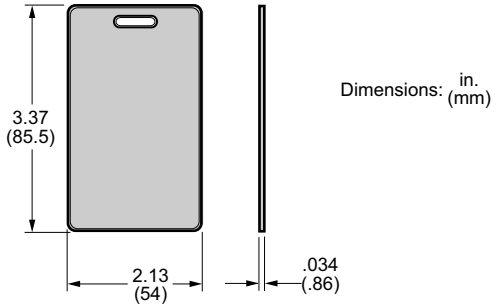

© 2011–2014 Schneider Electric
All Rights Reserved

Schneider Electric USA, Inc.
1415 S. Roselle Road
Palatine, IL 60067 USA
1-888-778-2733
www.schneider-electric.us

Schneider Electric™ and EVlink™ are trademarks or registered trademarks of Schneider Electric.
All other trademarks are property of their respective owners.

2800CT1001R08/14 © 2011–2014 Schneider Electric All Rights Reserved
Replaces 2800CT1001R05/14